SERVICE PARTS LIST

BULLETIN NO. 54-07-2340

SPECIFY CATALOG NO. AND SERIAL NO. WHEN ORDERING PARTS			REVISED BULLETIN	DATE
12 VOLT M-SPECTOR 360™ (Digital Inspection Camera)				Feb. 2013
CATALOG NO.	**2313-20**	SERIAL NUMBER **D59A**	WIRING INSTRUCTION	

FIG.	PART NO.	DESCRIPTION OF PART	NO. REQ.
1	----------	O-Ring	(1)
2	----------	Upper Rotating Head	(1)
3	----------	Lower Rotating Head	(1)
4	----------	Top Housing	(1)
5	----------	LCD Lens	(1)
6	----------	LCD Cushion	(1)
7	----------	2 x 6 Plastite Screw	(17)
8	----------	1.7 x 5 Plastite Screw	(1)
9	----------	Rubber Washer	(4)
10	----------	2 x 4 Washer Head Screw	(4)
11	----------	LCD	(1)
12	----------	Rotate Head PCB	(1)
13	----------	Ferrite Bar Holder	(1)
14	----------	2 x 6 Washer Head Screw	(2)
15	----------	Battery Connector Block	(1)

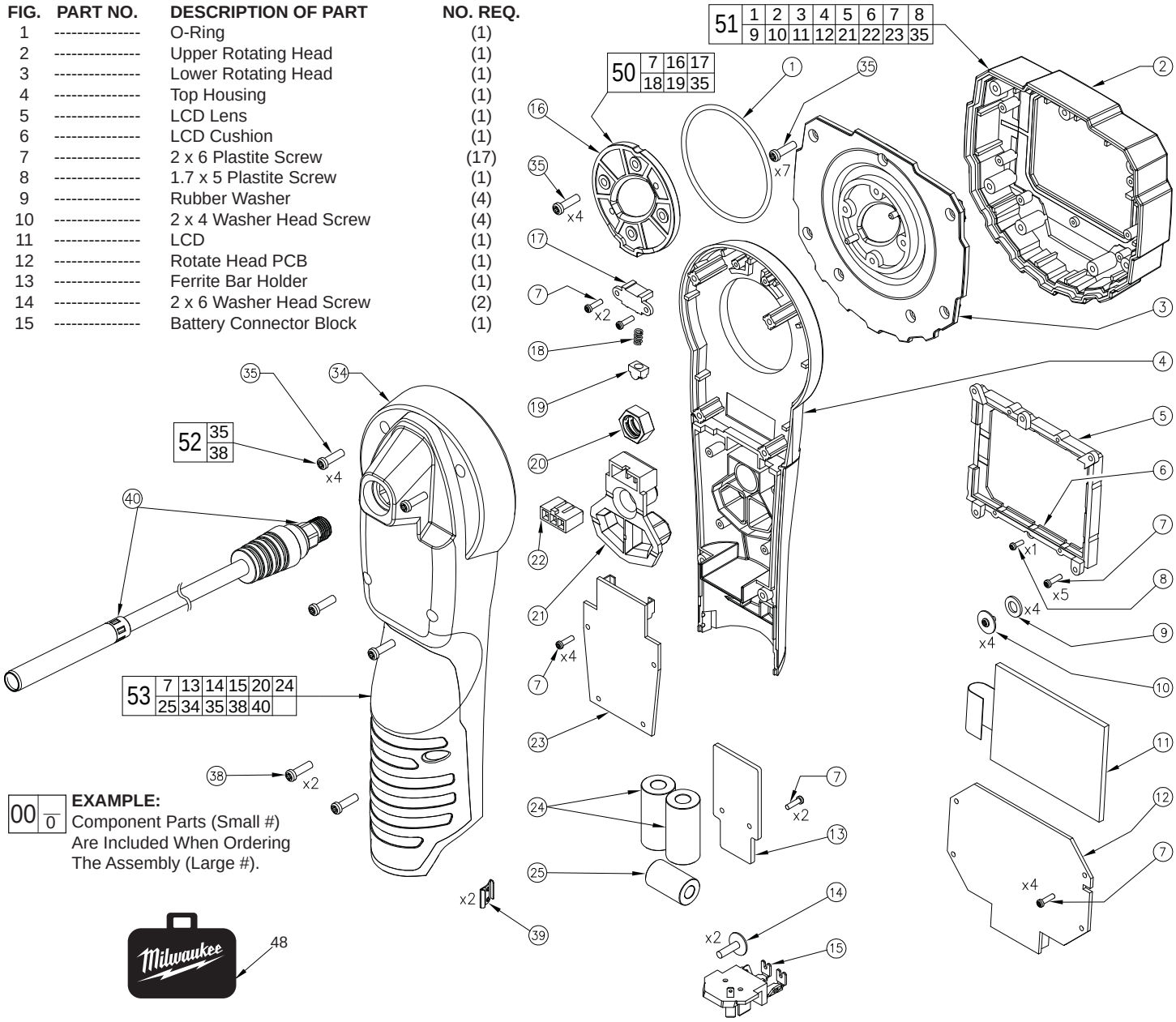

00 0 **EXAMPLE:** Component Parts (Small #) Are Included When Ordering The Assembly (Large #).

FIG.	PART NO.	DESCRIPTION OF PART	NO. REQ.
16	----------	Rotary Stopper	(1)
17	----------	Detent Stud Holder	(1)
18	----------	Spring	(1)
19	----------	Detent Stud	(1)
20	----------	M10 Nut	(1)
21	----------	Key Pad	(1)
22	----------	Light Guide	(1)
23	----------	PCB	(1)
24	----------	Ferrite Bar	(2)
25	----------	Ferrite Bar	(1)
34	----------	Bottom Housing	(1)
35	----------	3 x 8 Plastite Screw	(15)
38	----------	2.6 x 8 Plastite Screw	(2)
39	42-70-0250	Housing Clip	(2)
40	----------	3' Camera Cable	(1)
42	43-74-0600	Hook (Not Shown)	(1)
43	44-26-0500	Magnet (Not Shown)	(1)

FIG.	PART NO.	DESCRIPTION OF PART	NO. REQ.
44	44-79-0200	Mirror (Not Shown)	(1)
45	48-53-0113	Pipe Guide Attachment (Not Shown)	(1)
46	12-20-2350	Service Nameplate (Not Shown)	(1)
48	42-55-2315	Carrying Case	(1)
50	14-20-1500	Rotating Screen Detent Kit	(1)
51	14-34-0925	Front Handle Assembly	(1)
52	45-04-1125	Housing Screw Set	(1)
53	14-34-0950	Rear Handle Assembly (2313-20)	(1)

MILWAUKEE ELECTRIC TOOL CORPORATION
13135 W. LISBON RD., BROOKFIELD, WI 53005

Drwg. 2