5301241
Model No. LG-35-12V
35 Gallon Trailer Sprayer W/5 Nozzle Boom

ASSEMBLY / OPERATION INSTRUCTIONS / PARTS

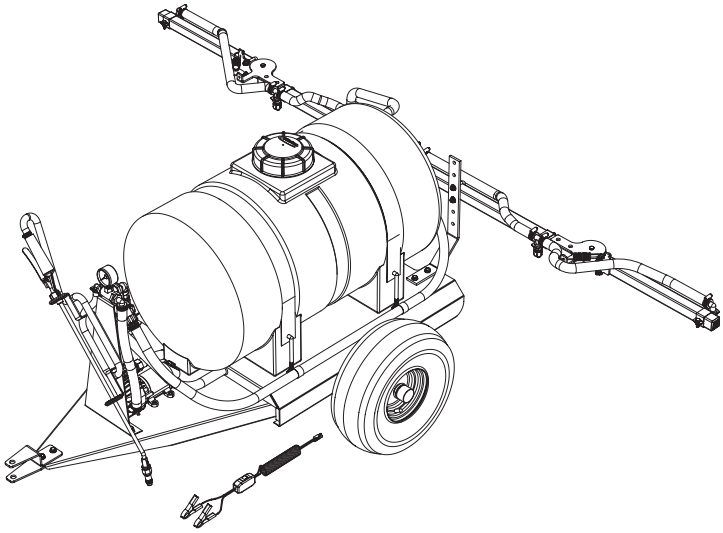

GENERAL INFORMATION

The purpose of this manual is to assist you in operating your sprayer. Please read it carefully as it furnishes information which will help you operate and maintain your sprayer.

WARRANTY / PARTS / SERVICE

Products are warranted for one year from date of purchase against manufacturer or workmanship defects.

Your authorized dealer is the best source of replacement parts and service. To obtain prompt, efficient service, always remember to give the following information.

1. Correct part description and part number.
2. Model number of your sprayer.
3. Serial number of your sprayer.

Part number and descriptions can be obtained from the illustrated parts list section of this manual. Whenever you need parts or repair service, contact your distributor / dealer first. For warranty work, always take your original sales slip, or other evidence of purchase date, to your distributor / dealer.

TECHNICAL SPECIFICATIONS

- 12 Volt Pump
- 2.1 G.P.M.; 0 - 60 P.S.I.
- Pressure Gauge
- Suction Line Filter
- 15 Ft. Hand Gun Hose
- Pneumatic Tires, 15/600 x 6
- Lever Action Gun
- 5 Nozzle Boom Assembly
- Break-Away Outer Booms
- 128 Inch Spray Swath
- Adjustable Boom Height

ASSEMBLY INSTRUCTIONS

The sprayer is assembled except for the pressure gauge, axle, wheels and boom assembly.

1. Attach the axle to the trailer frame with four (4) bolts, etc as shown on the exploded view.

2. Coat the ends of the axle with oil. This will help when sliding the wheel onto the axle.

3. Be sure that the wheel will turn freely, and then affix the cotter pin through the axle.

4. Center the center boom tube on the boom mounts and secure in place with the (2) u-bolts & whiz locknuts.

5. Connect the feeder hose to the boom fitting and clamp it in place with a hose clamp.

6. Thread the pressure gauge into the nylon fitting. Use a good grade of thread sealant to prevent leaks.

TESTING THE SPRAYER

It is important to test the sprayer with plain water before actual spraying is attempted. This will enable you to check the sprayer for leaks in the plumbing system.

1. Open tank lid and be sure the tank is clean and free of foreign material. Fill the tank about half full with plain water.

2. Open the valve in the suction line and allow water to flow to the pump. The valve is located at this point to enable the strainer to be taken apart for cleaning.

3. There is a "Y"-valve behind the valve mount bracket with 2 shut-off levers. One of these is a shut-off for the boom and the other is to bypass solution back to the tank, thus decreasing the pressure.

4. You may now start the sprayer. Solution will begin spraying from the boom nozzle when the valve to the boom is opened.

5. The pressure should now be adjusted as desired.

6. During this testing period be sure to observe the spray pattern given by the spray nozzles. Each nozzle should overlap the next nozzle. If there is any pattern distortion, it will be necessary to remove and clean the affected tips.

CAUTION: Never use a metal object or other sharp item for cleaning a nozzle tip. It is better to use a nozzle brush (not wire brush) or compressed air for tip cleaning.

1000 FIMCO LANE • P.O. BOX 1700 • NO. SIOUX CITY, SD 57049
Form No. 5004576 (738 8/05) Printed In U.S.A.

OPERATION AND CALIBRATION

The performance of any agricultural chemical depends upon the proper application of the correct amount. **Be sure that your equipment has been calibrated before spraying.** The nozzles on the boom will spray a 128" wide pattern swath, however it is necessary to overlap patterns to get proper coverages. The first pass will only cover 80" of overlapped spray. Each pass there after will provide a 100" swath of proper coverage. The proper nozzle height is 18 inches above the object being sprayed.

DO NOT EXCEED 5 M.P.H. AT ANYTIME.

- Chemical labels may show application rates in gallons per acre, gallons per 1000 square feet, or gallons per 100 square feet. You will note that the tip chart shows all three of these rating systems.
- Four things must be considered before spraying with the boom.
  1. How much chemical must be mixed in the tank.
  2. Rate of spray (gallons per acre to be sprayed).
  3. What pressure (P.S.I.) will be used.
  4. Speed traveled (M.P.H.) while spraying.
- Refer to the chemical label to determine the chemical mixture.
- See the tip chart to determine the pressure to be used. The chart will also show the speed used when spraying.
- If the towing vehicle does not have a speedometer, speed can be determined as per the directions.

Once you know how much you are going to spray then determine (from the tip chart) the spraying pressure (PSI) and the spraying speed (MPH). The pressure can be set by running the sprayer with the boom nozzles “on”, and then adjusting the relief valve until the gauge reads the desired pressure.

When selecting pressure from the tip chart, it is a good idea to try for the 20 or 30 PSI range as this allows an excellent nozzle pattern. 10 PSI begins to break up the pattern, and at 40 PSI, you may notice some drift.

Conditions of weather and terrain must be considered when setting the sprayer. Do not spray on windy days. Protective clothing must be worn in some cases. Be sure to read the chemical label carefully.

Some towing vehicles do not have a speedometer. You may follow these directions in that case. Determining the proper speed of the towing vehicle can be done by marking off 100, 200, and 300 ft. The speed chart indicates the number of seconds it takes to travel the distances. Adjust the throttle until you travel the distances in the number of seconds indicated by the speed chart. Once you have reached the throttle setting needed, mark the throttle location so you can stop and go again (returning to the same speed).

The following situation is a typical spraying example.

RATE CHART FOR 11002 SPRAY TIP

Pressure P.S.I.	Capacity G.P.M.	1 MPH 88 FPM	2 MPH 176 FPM	3 MPH 264 FPM	4 MPH 352 FPM	5 MPH 440 FPM	7.5 MPH 660 FPM	10 MPH 880 FPM
		Gallons Per Acre Based on Water - 20" Spacing						
20	.14	41.8	20.9	14.0	10.5	8.4	5.6	4.2
30	.17	51.2	25.6	17.2	12.9	10.3	6.9	5.1
40	.20	59.2	29.6	19.8	14.9	11.9	7.9	5.9
50	.23	66.4	33.2	22.2	16.6	13.3	8.8	6.6
		Gallons Per 1000 Sq. Ft. Based on Water - 20" Spacing						
20	.14	.96	.48	.32	.24	.19	.13	.10
30	.17	1.18	.59	.39	.30	.24	.16	.12
40	.20	1.36	.68	.45	.34	.27	.18	.14
50	.23	1.52	.76	.51	.38	.31	.20	.15
		Gallons Per 100 Sq. Ft. Based On Water - 20" Spacing						
20	.14	.095	.048	.032	.024	.019	.012	.009
30	.17	.117	.059	.039	.029	.024	.015	.011
40	.20	.135	.068	.045	.034	.027	.018	.013
50	.23	.152	.076	.050	.038	.030	.020	.015

MPH = Miles Per Hour
FPH = Feet Per Minute
PSI = Pounds Per Square Inch
GPM = Gallons Per Minute

The chemical label says to apply 1.2 gallons of solution per 1000 sq. feet. Looking at the tip chart you see that you can spray 1.18 gallons per 1000 square feet at 30 PSI and 1 MPH. Let’s say that it is a fairly still day and the ground is rough. The 30 PSI and 1 MPH will be all right for this spraying situation.

After measuring off the 100, 200, and 300 feet distances, prepare to make the trial runs. The speed chart lists the time to be 68, 136, and 205 seconds. The sprayer does not need to be running at this time. It is best to start about 10 feet ahead of the starting mark so you will be at the set throttle speed by the time you reach the starting mark.

A stopwatch would be best to use for timing the travel but a watch with a second hand can be used. Check each distance separately. By doing this you can check yourself until the time is correct.
Once you have the throttle setting determined, mark the setting so you can return to it each time you want to spray with this chemical.

Add proper amounts of water and chemical to the tank and drive to starting place for spraying. When you are ready to spray, turn the ball valve for the boom to the “on” position. This will start solution spraying from the tips.

AFTER SPRAYING

WARNING: Some chemicals will damage the pump valves if allowed to soak untreated for a length of time. Always flush the pump with water after use. Do not allow chemicals to sit in pump for extended times of idleness.

GROUND SPEED CHART

Speed in M.P.H. (Miles Per Hour)	Time Required in Seconds to Travel a distance of; 100 ft.	200 ft.	300 ft.
1.0	68	136	205
2.0	34	68	102
3.0	23	45	68
4.0	17	34	51
5.0	14	27	41
6.0	11	23	34
7.0	9.7	19	29
8.0	8.5	17	26
9.0	7.6	15	23
10	6.8	14	20

After use dispose of unused chemicals per instructions of chemical manufacturer. Fill the sprayer tank part way with water, start the sprayer and allow clear water to be pumped through the plumbing system and out through the spray nozzles. Use the handgun on the sprayer to thoroughly wash all internal parts of tank and tank cover.

Refill the tank about half full with plain water and use a chemical neutralizer such as NUTRA-SOL or equivalent and repeat cleaning instructions above. Flush the entire sprayer with the neutralizing agent. Follow the chemical manufacturers disposal instructions of all wash and rinsing water.

Remove tips and screens from the boom. Wash tips thoroughly with water or cleaning solution (appropriate for chemical used.) Blow out orifice, clean and dry. If orifice remains clogged, clean it with fine bristle (not wire) brush, or with a toothpick. Do not damage the orifice. Water rinse and dry tips before storing.

WINTER STORAGE

Drain all water out of sprayer, paying special attention to pump, valves, and hand booms. These items are especially prone to damage from chemicals and freezing weather.

The sprayer and boom assembly should be winterized before storage by pumping a solution of RV anti-freeze through the entire plumbing. Proper care and maintenance will prolong the life of the sprayer and boom.

Pump Sub-Assembly #5275146

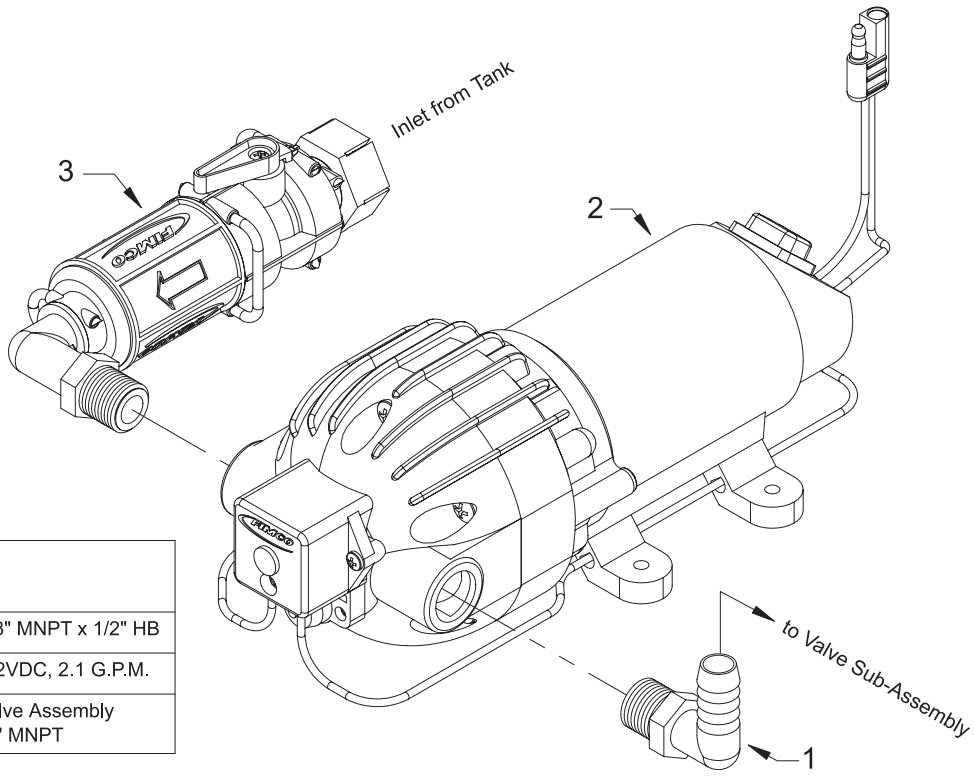

ITEM NO.	PART NUMBER	QTY.	DESCRIPTION
1	5010043	1	Nylon Elbow, 3/8" MNPT x 1/2" HB
2	5275016	1	Triplex Pump, 12VDC, 2.1 G.P.M.
3	5275092	1	FIMCO Filter/Valve Assembly w/1/2" HB x 3/8" MNPT

Repair Parts List For Pump 5275016

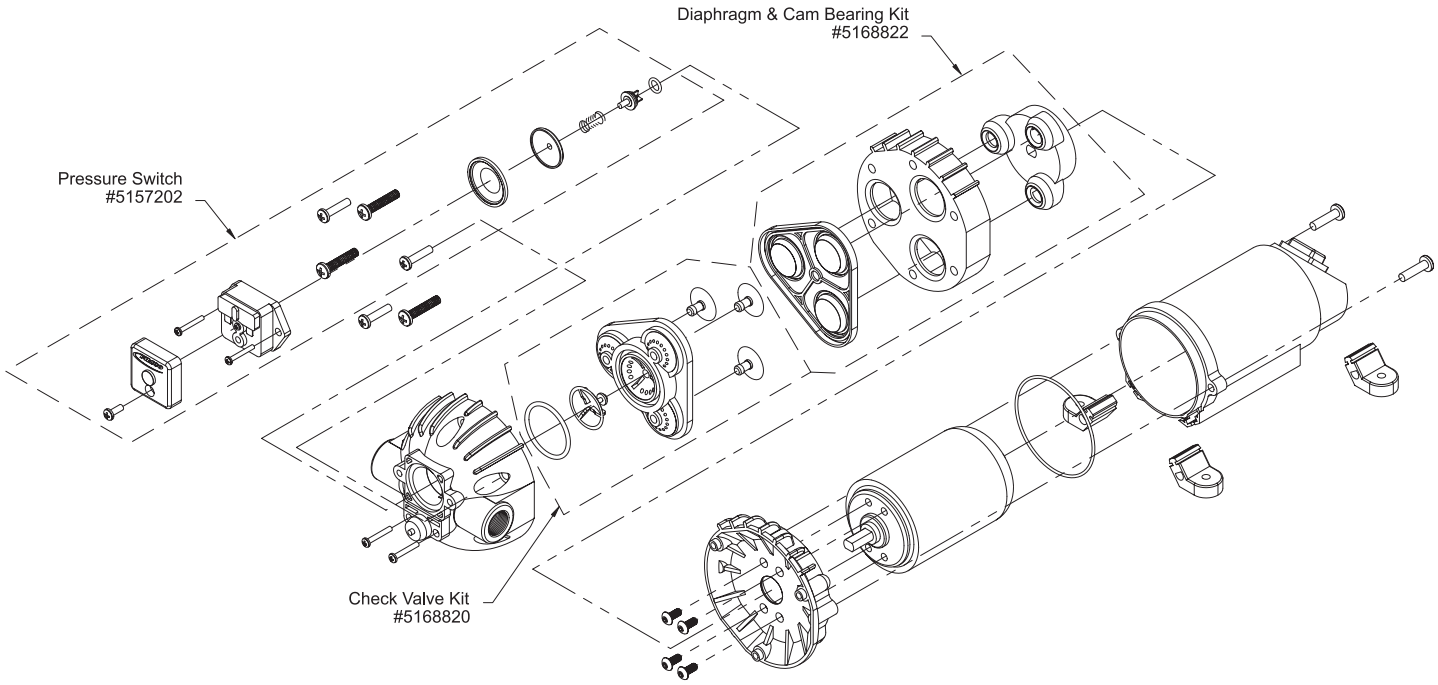

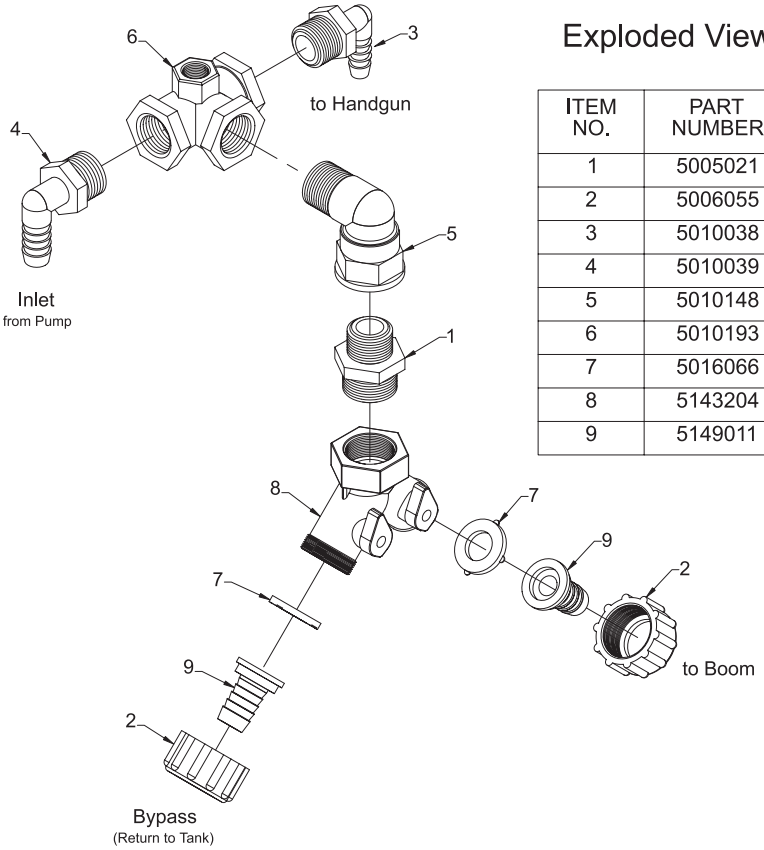

Exploded View/Parts List for Valve Sub-Assembly #5274806

ITEM NO.	PART NUMBER	QTY.	DESCRIPTION
1	5005021	1	Nylon Adapter, 1/2" MNPT x 3/4" MGHT
2	5006055	2	Nylon Knurled Swivel Nut, 3/4" FGHT
3	5010038	1	Nylon Elbow, 1/2" MNPT x 3/8" HB
4	5010039	1	Nylon Elbow, 1/2" MNPT x 1/2" HB
5	5010148	1	90 Degree Nylon Street Elbow, 1/2" MNPT x 1/2" FNPT
6	5010193	1	Nylon Tee, 1/2" FNPT w/1/4" Port (Gauge)
7	5016066	2	#102 Hose Washer (Gasket) 1" O.D. Rubber
8	5143204	1	#235 Dual Hose Shut-Off "Y"-Valve, 3/4" GHT
9	5149011	2	Nylon Swivel, 1/2" Flat Seat Hose Barb

FIMCO Filter/Valve Assembly
#5275092

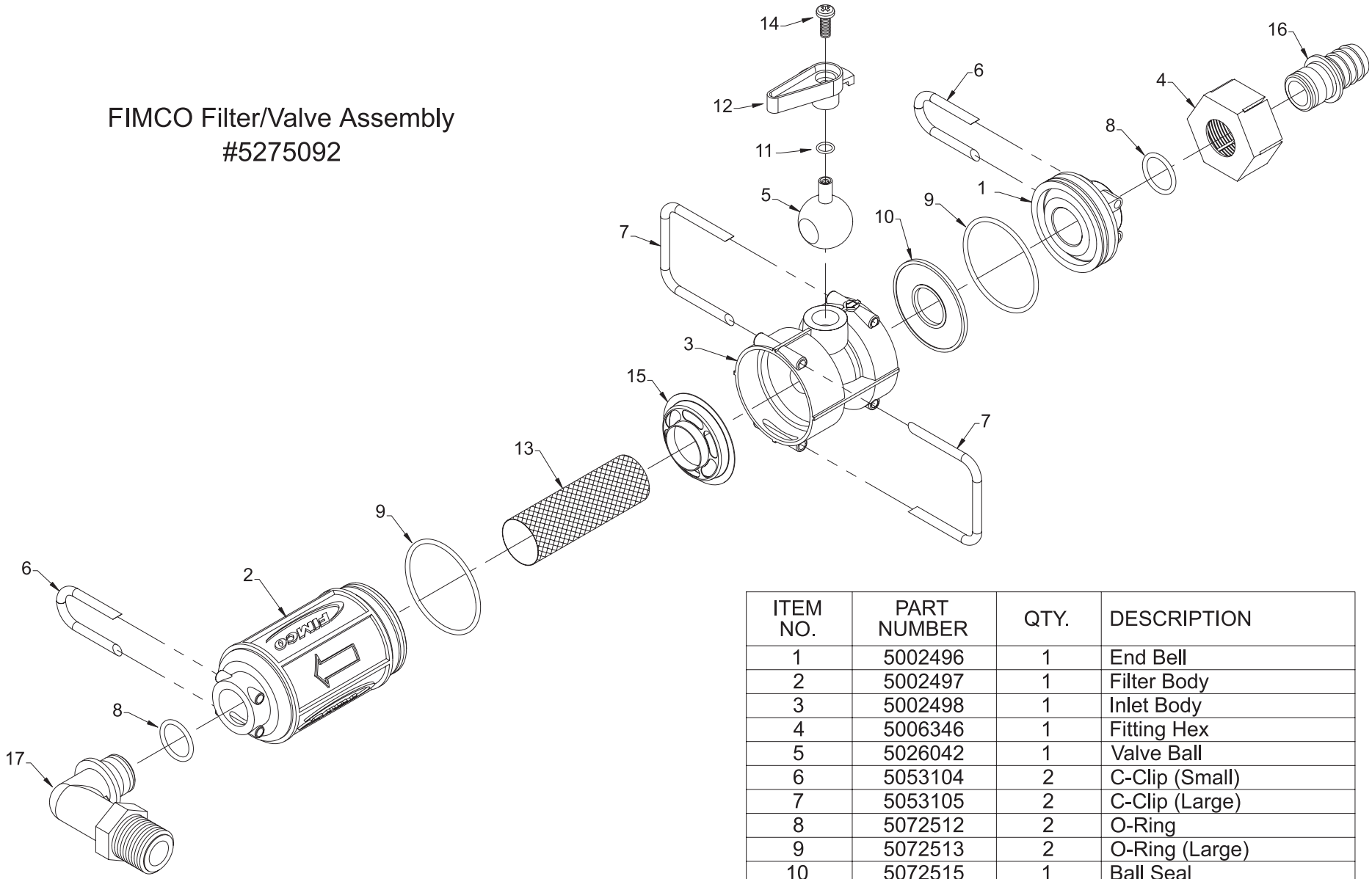

ITEM NO.	PART NUMBER	QTY.	DESCRIPTION
1	5002496	1	End Bell
2	5002497	1	Filter Body
3	5002498	1	Inlet Body
4	5006346	1	Fitting Hex
5	5026042	1	Valve Ball
6	5053104	2	C-Clip (Small)
7	5053105	2	C-Clip (Large)
8	5072512	2	O-Ring
9	5072513	2	O-Ring (Large)
10	5072515	1	Ball Seal
11	5072516	1	Ball O-Ring
12	5078198	1	Handle
13	5116414	1	Filter Screen
14	5117309	1	Handle Screw
15	5143397	1	Diverter
16	5149133	1	Straight Fitting
17	5149135	1	Elbow, 3/8" MNPT

Exploded View: LG-35-12V

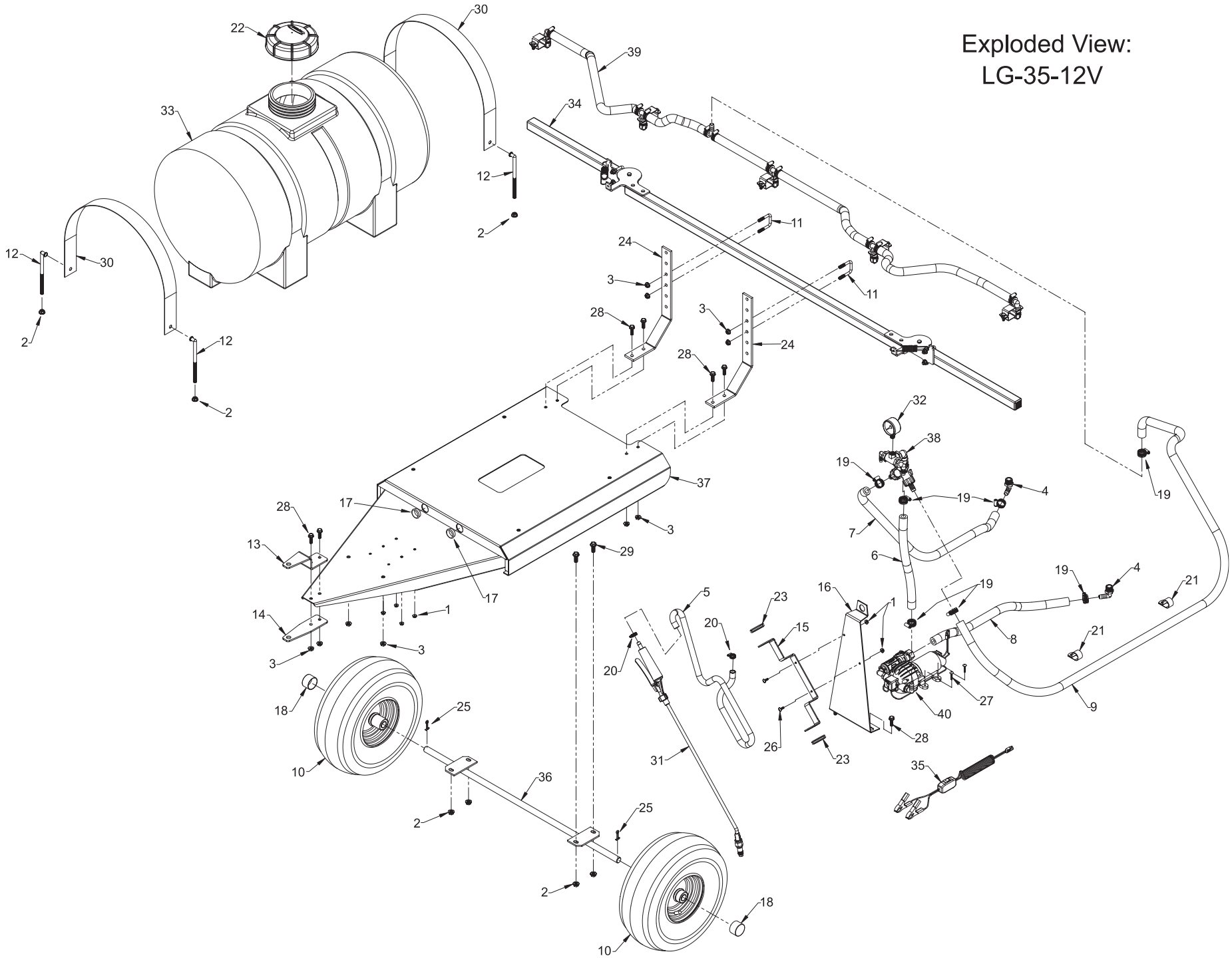

Repair Parts List for: LG-35-12V

ITEM NO.	PART NUMBER	QTY.	DESCRIPTION
1	5006186	6	#10-24 Hex Whiz (Flange) Locknut
2	5006259	12	3/8"-16 Hex Whiz (Flange) Locknut
3	5006307	12	5/16"-18 Hex Whiz (Flange) Locknut
4	5010039	2	Nylon Elbow, 1/2" MNPT x 1/2" HB
5	5020215	1	Hose, 3/8"-1 Brd. x 15 Ft.
6	5020357	1	Hose, 1/2"-1 Brd. x 16"
7	5020362	1	Hose, 1/2"-1 Brd. x 32"
8	5020365	1	Hose, 1/2"-1 Brd. x 24"
9	5020377	1	Hose, 1/2"-1 Brd. x 58"
10	5021087	2	Wheel, 15/600 x 6, 2-Ply, Turf Tread
11	5034159	2	Square U-Bolt, 5/16" x 1 5/16" x 1 7/8"
12	5034298	4	"L" Head Hook Bolt
13	5038517	1	Hitch Bracket (Formed)
14	5038518	1	Hitch Bracket (Flat)
15	5038638	1	Handgun Holder Bracket
16	5038670	1	Valve Mounting Bracket
17	5041105	2	Snap Bushing
18	5046110	2	Hub Cover
19	5051022	7	Hose Clamp, 1/2"
20	5051114	2	Hose Clamp, 3/8"
21	5053027	2	Hose Clip
22	5058183	1	FIMCO 5" Threaded Tank Lid w/.25" Hole for Lanyard
23	5075014	2	Rubber Grommet (Black)
24	5095071	2	Boom Mount
25	5101207	2	Cotter Pin, 5/32" x 1 3/4"
26	5117167	2	#10-24 x 5/8" Phillips Truss Head Machine Screw
27	5117168	4	#10-24 x 1" Phillips Truss Head Machine Screw
28	5117300	8	5/16"-18 x 1" Flange Whiz Lock Screw, Indented Hex Head
29	5117307	4	3/8"-16 x 1" Whiz (Flange) Lockscrew (Zinc Plated)
30	5133255	2	Tie-Down Strap
31	5163100	1	Low Flow Handgun w/X-26 Adjustable Nozzle, 29 1/2" Wand
32	5167007	1	Gauge, 0-100 p.s.i.
33	5169221	1	35 Gallon Leg Tank
34	5274361	1	5-Nozzle Boom Sub-Assembly
35	5274443	1	Lead Wire Assembly (Quick Coupler & 50 Amp Clips)
36	5274768	1	Axle Weldment (35 Gallon Trailer)
37	5274769	1	35 Gallon Trailer Sprayer
38	5274806	1	Valve Sub-Assembly
39	5274825	1	5-Nozzle Harness Assembly with 110 Degree Tips
40	5275146	1	Pump Sub-Assembly

Exploded View/Parts List for:
5-Nozzle Boom Sub-Assembly
#5274361

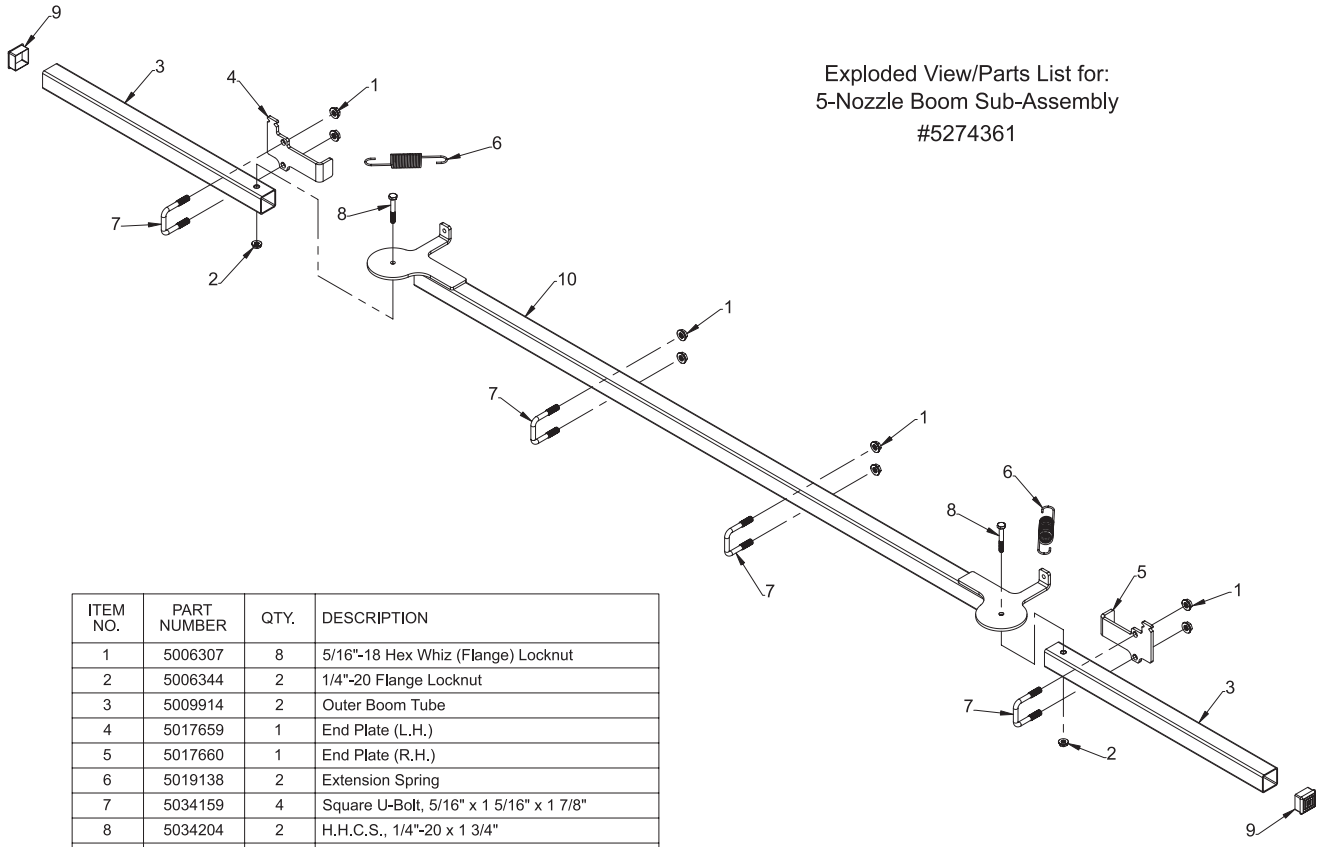

ITEM NO.	PART NUMBER	QTY.	DESCRIPTION
1	5006307	8	5/16"-18 Hex Whiz (Flange) Locknut
2	5006344	2	1/4"-20 Flange Locknut
3	5009914	2	Outer Boom Tube
4	5017659	1	End Plate (L.H.)
5	5017660	1	End Plate (R.H.)
6	5019138	2	Extension Spring
7	5034159	4	Square U-Bolt, 5/16" x 1 5/16" x 1 7/8"
8	5034204	2	H.H.C.S., 1/4"-20 x 1 3/4"
9	5046344	2	Square Cap, Black (1 1/4" Square Tube)
10	5273990	1	5-Nozzle Boom Weldment (Center Section)

Nozzle Harness Assembly
#5274825

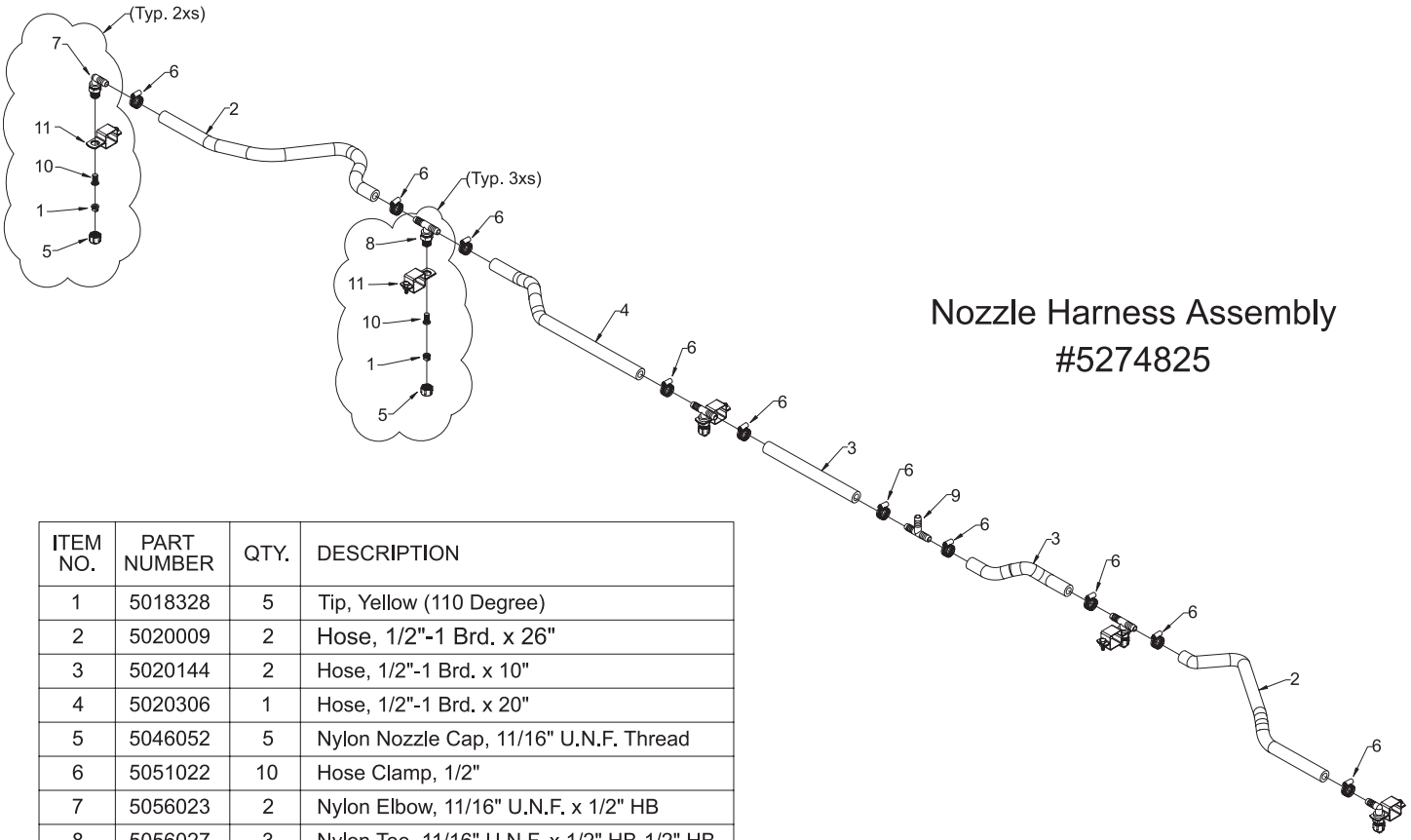

ITEM NO.	PART NUMBER	QTY.	DESCRIPTION
1	5018328	5	Tip, Yellow (110 Degree)
2	5020009	2	Hose, 1/2"-1 Brd. x 26"
3	5020144	2	Hose, 1/2"-1 Brd. x 10"
4	5020306	1	Hose, 1/2"-1 Brd. x 20"
5	5046052	5	Nylon Nozzle Cap, 11/16" U.N.F. Thread
6	5051022	10	Hose Clamp, 1/2"
7	5056023	2	Nylon Elbow, 11/16" U.N.F. x 1/2" HB
8	5056027	3	Nylon Tee, 11/16" U.N.F. x 1/2" HB-1/2" HB
9	5086003	1	Nylon Hose Tee, 1/2" HB
10	5116019	5	50 Mesh Nozzle Strainer, Red
11	5273796	5	1 1/4" Square Boom Nozzle Clamp (BC114)